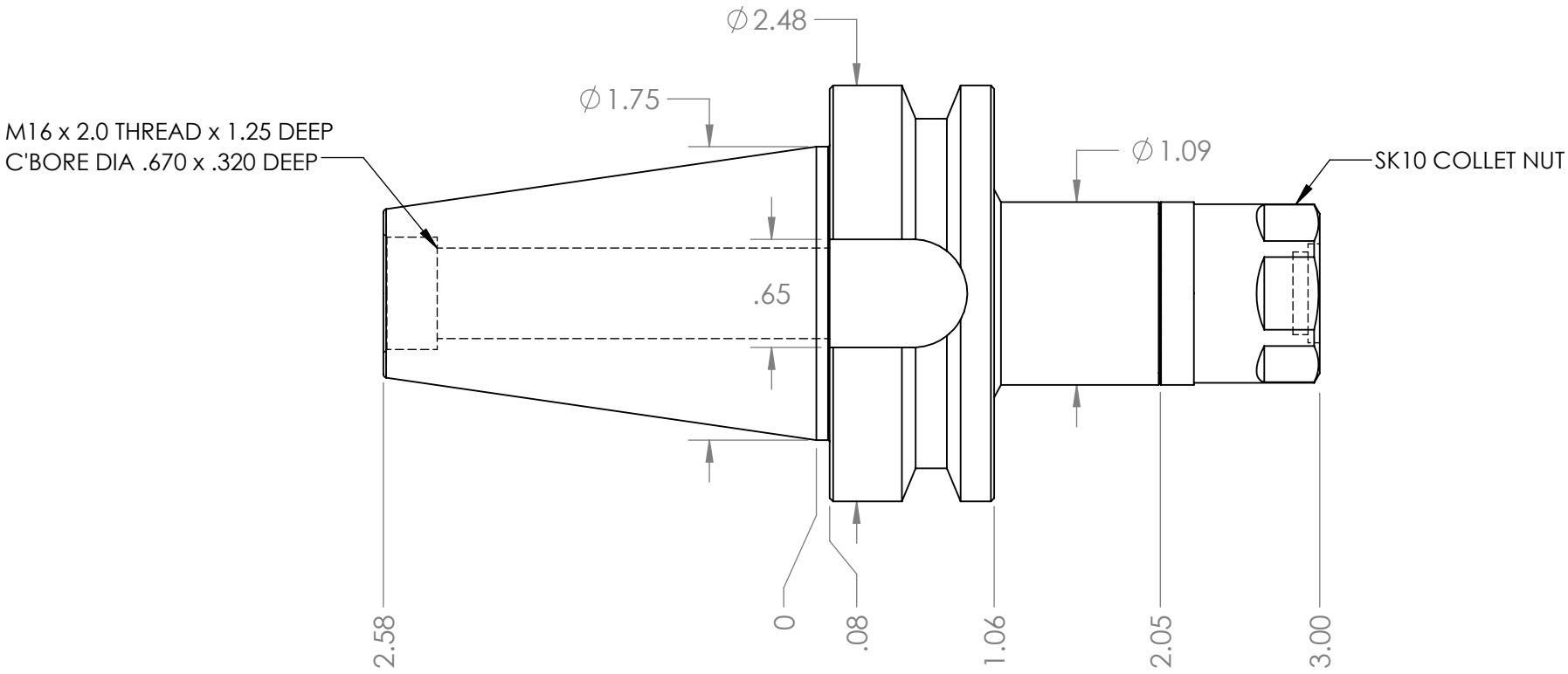


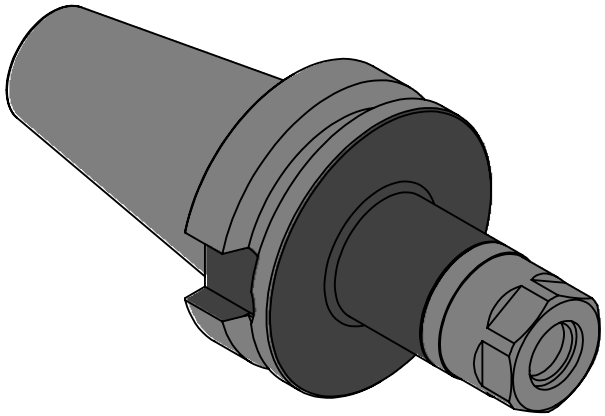

NOTES:
WORKS ON ALL BT40 MACHINES
ACCEPTS ALL SK10 COLLETS
USES WRENCH PART # ER16-WRENCH (NOT INCLUDED)
FOR MORE PRODUCT DETAILS PLEASE GO TO MARITOOL.COM
AND SEARCH ITEM # LISTED ON THIS PRINT

MARITOOL

WWW.MARITOOL.COM

ITEM# **BT40 SK10-3.0**

Made in USA